Shively Labs®

Circularly Polarized FM Broadcast Antenna

Model 6828

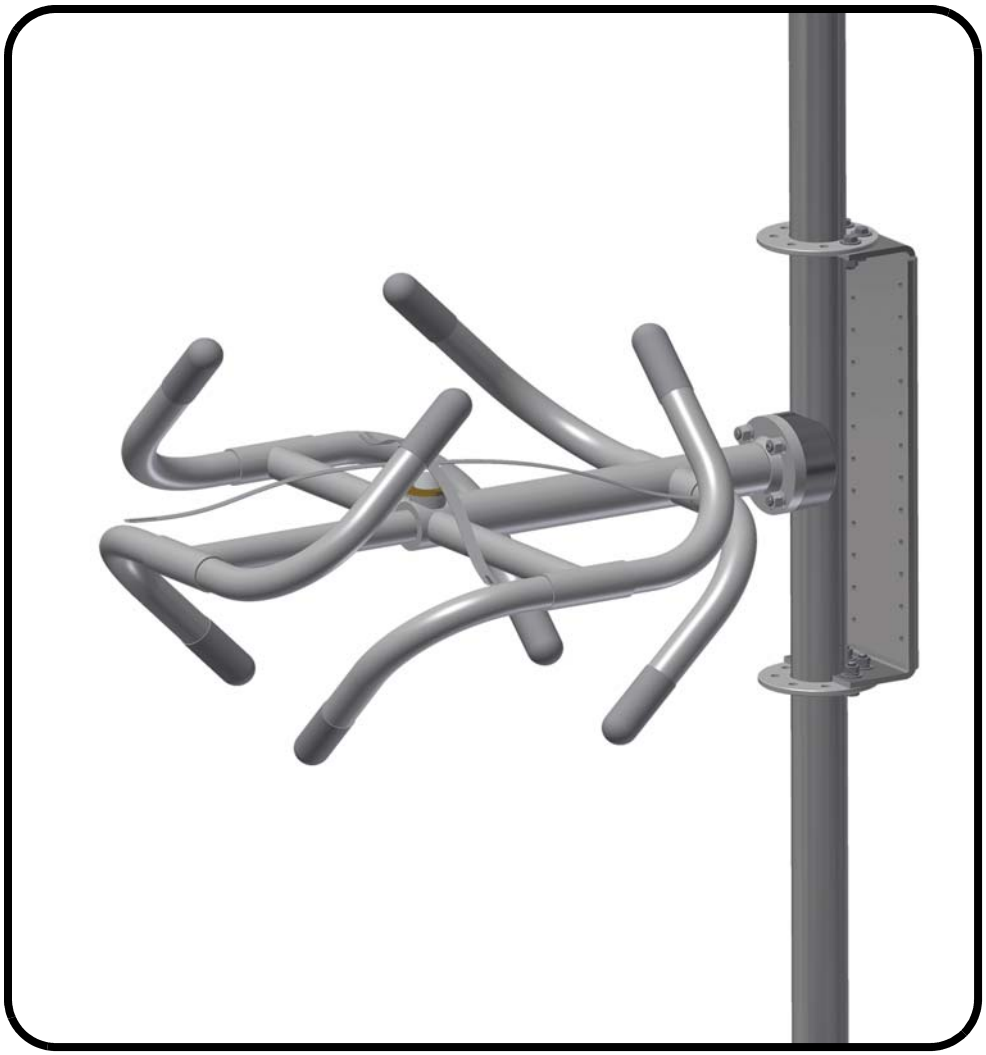

Instruction Manual

Installation, Operation, & Maintenance

Congratulations!

Thank you for purchasing one of the finest FM broadcast antennas on the market today. The Shively Labs Model 6828 is the top-of-the-line in its class for its simplicity, superior performance and durability.

Your purchase is backed by the best technical support in the industry. Shively is a leading manufacturer in the broadcast industry, providing an extensive range of antennas, transmission line and components. Our technical staff has a wealth of experience in the broadcast industry and is standing by to serve you in any way.

This manual is intended to give you a good basic understanding of your antenna: its proper and safe installation, startup, and operation, and trouble-shooting and maintenance information to keep it working satisfactorily for years to come. *Please have everyone involved with the antenna read this manual carefully, and keep it handy for future reference.*

Meanwhile, please feel free to contact your sales representative at Shively Labs at any time if you need information or help. Call or write:

Shively Labs®

A Division of Howell Laboratories, Inc. **Bridgton, Maine 04009 USA**

188 Harrison Rd., P. O. Box 389, Bridgton, Maine 04009 USA

(207) 647-3327 **1-888-SHIVELY** **24-hour (207) 329-5118** **FAX (207) 647-8273**

sales@shively.com **www.shively.com**

An Employee-Owned Company ***ISO 9001:2000-Certified***

Publication No. im-6828 (140624)

IMPORTANT

Please read this manual in its entirety before beginning installation of your antenna!

Failure to follow the installation and operation instructions in this manual could lead to failure of your equipment and might even void your warranty!

Table of Contents

Chapter 1 Preparation 1

Check the shipment. 1

Check the parts. 1

Prepare the mounting location. 1

Figure 1 Tower layout, two-bay antenna (single-stage power distribution) 2

Figure 2 Tower layout, 4-bay and 6-bay antennas (single-stage power distribution) 3

Figure 3 Tower layout, 8-bay, 10-bay and 12-bay antennas (multi-stage power distribution) 4

Torque specifications. 5

Table 1 Torque specifications 5

Flange bolt tightening sequence 5

Figure 4 Tightening sequence 5

Chapter 2 Mounting the Antenna Bays 7

Attach the antenna bays to the feedline sections 7

Figure 5 Mount the antenna bay onto the feedline. 7

Install the radome (if applicable) 8

Figure 6 Mount the radome over the antenna bay. 9

Figure 7 Apply sealant to the radome opening around the baymount. 10

Attach the back support mount 10

Figure 8 Mount the back support mount onto the feedline. 10

Chapter 3 Mounting the Antenna on the Tower 11

Figure 9 Standard mounting configurations 11

Assemble the mounting structure(s) 12

Figure 10 Mounting structure components. 12

Mount the antenna onto the mounting structure. 13

Figure 11 Lifting the antenna 13

Chapter 4 Connecting the Antenna (2-, 4-, or 6-bay) 15

Mount the power divider 15

Figure 12 Power divider mounting 15

Connect, loop, and secure the feedline cables. 16

Figure 13 Connect the feedline. 16

Figure 14 Loop and secure the feedline cables. 17

Install the transformer and connect the transmission line. 18

Figure 15 Transmission line connection 19

Chapter 5 Connecting the Antenna (8-, 10- or 12-bay) 21

Assemble the feed system. 21

Figure 16 Typical two-stage feed system. 22

Connect, loop, and secure the feedline cables. 23

Figure 17 Connect the feedline. 23

Figure 18 Loop and secure the feedline cables. 24

Connect the transmission line. 25

Figure 19 Transmission line connection 26

Table of Contents

(continued)

Chapter 6 Pressurization and Startup 27
Before beginning pressurization: 27
Test for leaks. 27
Figure 20 Pressurized gas schematic 28
Purge the system. 29
Table 2 Volume of Coax per 1000 Feet of Length 29
Leave the system pressurized. 30
Before beginning initial characterization: 30
Read transmission line VSWR. 30
Read transmission line TDR. 30
Read system VSWR. 31
Check radiator function. 31
Trim impedance. 31
Figure 21 Impedance-matching transformer 31
Before beginning checkout: 32
Check out. 32
Operate. 32
Figure 22 Apply the signal. 33
Chapter 7 Maintenance 35
Log 35
Inspection 35
Paint 35
Return Policy 35
Chapter 8 Troubleshooting 37
Broad Spectrum RF Noise 37
High VSWR 37
Change in Coverage 37
Chapter 9 Parts 39
Parts list. 39
Table 3 Parts List, (Radomes excluded) 39
Table 4 Parts List, Radome Assembly 42

1 Preparation

Check the shipment.

As soon as you receive your antenna, *BEFORE* signing for the shipment:

a. Check to be sure all the material has arrived.

b. Check for evident damage to any of the boxes.

c. If any boxes are missing, or if any are obviously damaged, describe the problem in a WRITTEN note on the shipping papers BEFORE signing them. Then call Shively right away, and we'll do everything we can to correct the situation.

Important!

Never store the antenna system outdoors, boxed or otherwise. Take pains to keep the antenna components dry. You will need to purge moisture from the interior of the antenna components before applying transmitter power, and purging will be much more time-consuming if the components get wet.

Check the parts.

NOTE

Item callouts are consistent across all the illustrations in this technical sheet.

Check to be sure all the parts shown in Table 3 on page 39 and Table 4 on page 42 have arrived in good condition.

Prepare the mounting location.

In addition to the above parts, before beginning you need to have:

- An installation drawing, showing the installation configuration - or:
- A "Figure 2," a sketch provided with the antenna proof-of-performance, showing the essential mounting parameters.
- Outrigged mounting structure(s) (customer-provided), in accordance with your installation drawing or "Figure 2."

a. Review your "Figure 2." Mark the tower legs at the location(s) where the antenna bay(s) will be mounted, Watch for tower components that might interfere with your installation.

CAUTION

If you do not get good electrical contact between the antenna and the mounting structure, the antenna may generate unwanted electrical signals, and performance may be degraded.

b. Before attaching the mounting structure to the tower, scrape away tower paint to ensure good electrical contact. You will retouch the paint after installation.

c. Study Torque specifications on page 5, then proceed to Mounting the Antenna Bays on page 7.

Figure 1. Tower layout, two-bay antenna
(single-stage power distribution)

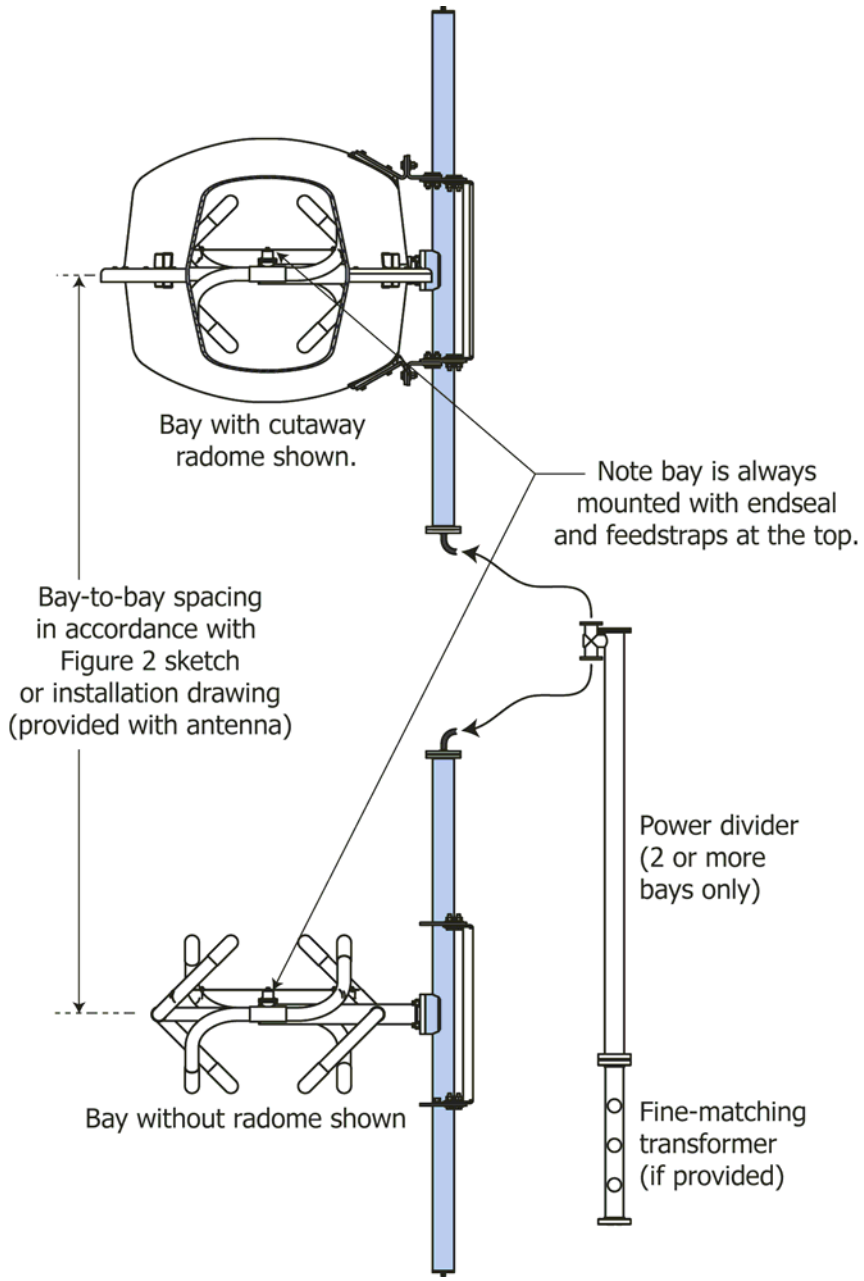

Figure 2. Tower layout, 4-bay and 6-bay antennas (single-stage power distribution)

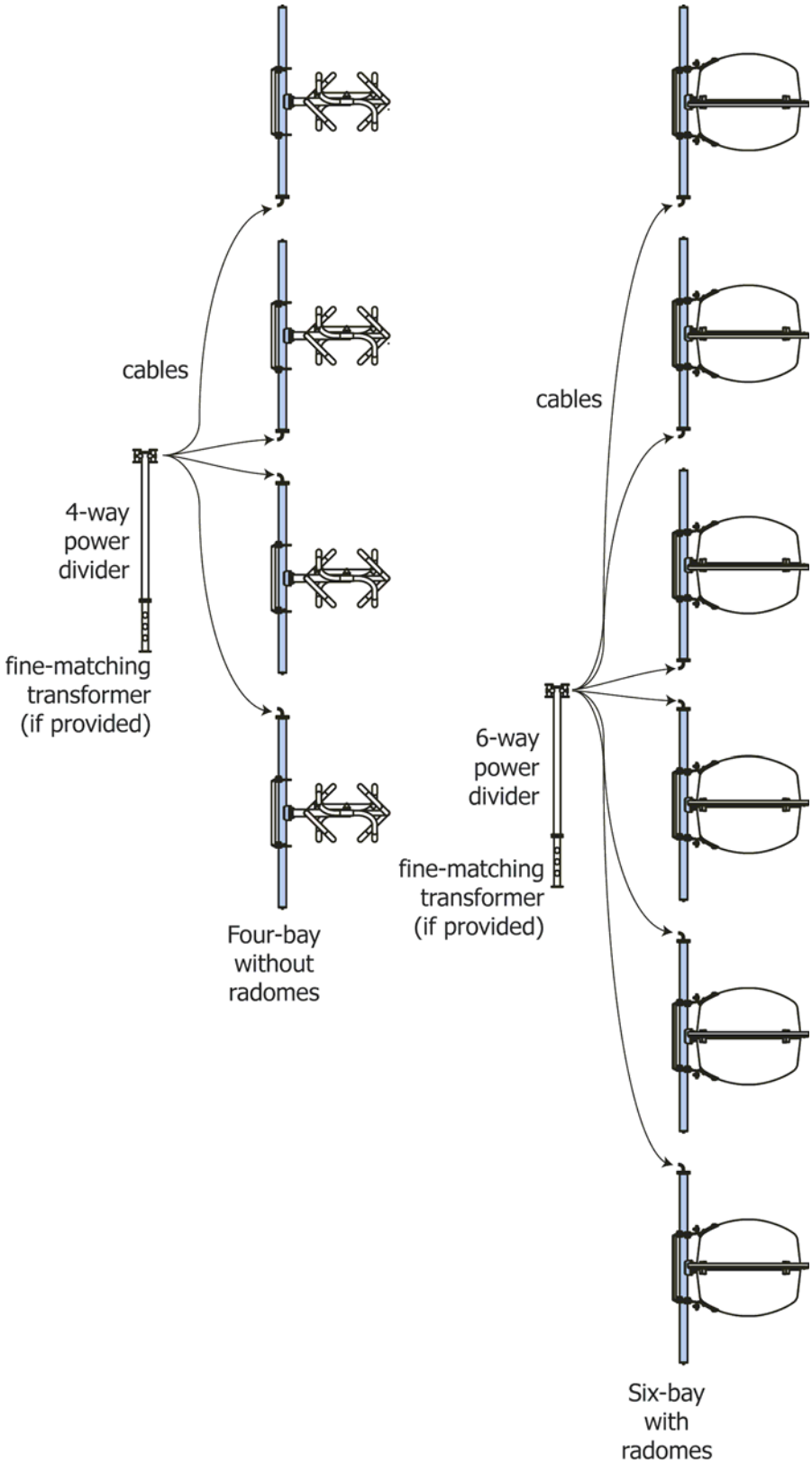

Figure 3. Tower layout, 8-bay, 10-bay and 12-bay antennas (multi-stage power distribution)

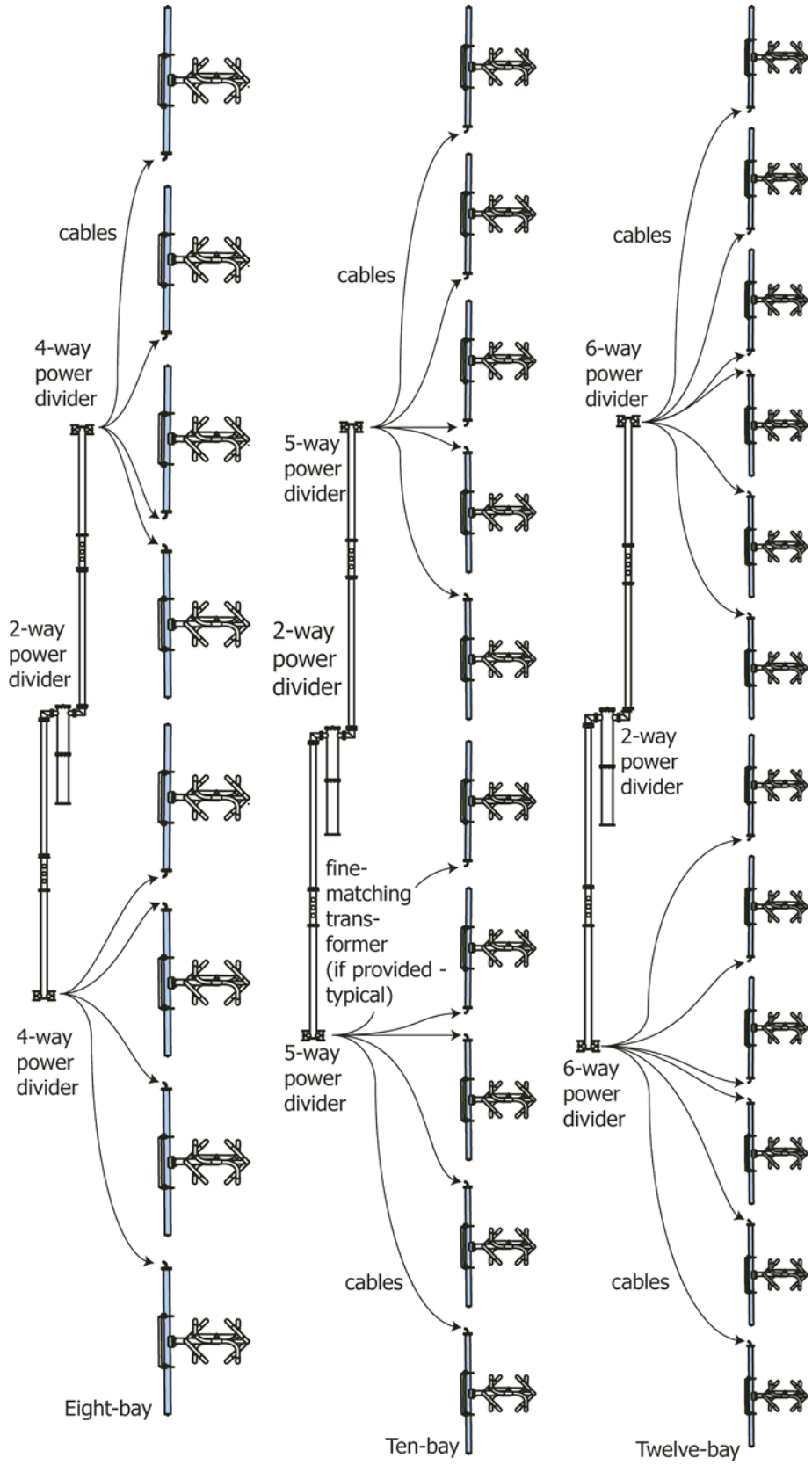

Torque specifications.

NOTE

Use an anti-seize compound to minimize galling on stainless steel threads.

Table 1. Torque specifications

Hardware size	Torque (dry)	Torque (lubricated)
1/4-20 stainless steel	5 lb-ft (0.69 kg-m)	*** lb-ft (*** kg-m)
5/16-18 stainless	9 lb-ft (1.2 kg-m)	*** lb-ft (*** kg-m)
3/8-16 stainless	17 lb-ft (2.3 kg-m)	*** lb-ft (*** kg-m)
1/2-13 stainless	37 lb-ft (5.1 kg-m)	*** lb-ft (*** kg-m)
1/2-13 galvanized	57 lb-ft (7.9 kg-m)	*** lb-ft (*** kg-m)
5/8-11 stainless	75 lb-ft (10.4 kg-m)	*** lb-ft (*** kg-m)

Flange bolt tightening sequence

Figure 4. Tightening sequence

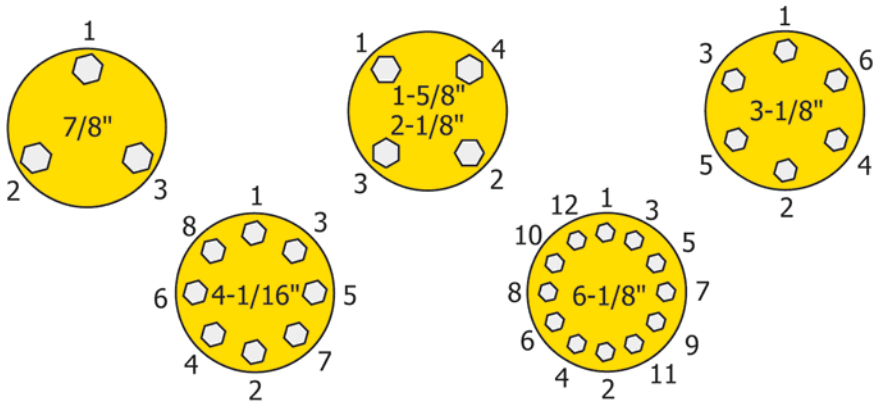

2 Mounting the Antenna Bays

CAUTION

All contact surfaces and openings to the interior of the components are protected from contamination and from physical damage by protective covers and plastic bags. Do not remove this protection until ready to connect the components.

CAUTION

O-rings are made of silicone. Do not lubricate them with silicone grease, as this will soften the O-ring. Use only a light lubricating coat of O-Lube (provided) or petroleum jelly; too much may hamper electrical contact and contaminate the interior of the system.

CAUTION

Be sure the baymount flange O-ring is properly seated in its groove and not pinched between the flange contact surfaces.

CAUTION

Be sure the radiator's inner conductor fits cleanly over the baymount's inner conductor connector. If any of the fingers of the connector are forced outside the radiator's inner conductor (we call this a "split bullet"), this will cause arcing and damage to the antenna.

CAUTION

Always mount the antenna bay so that the *** and feedstraps will be at the top, even if the feedline section will be "upside-down" with the input at the top.

Figure 5. Mount the antenna bay onto the feedline.

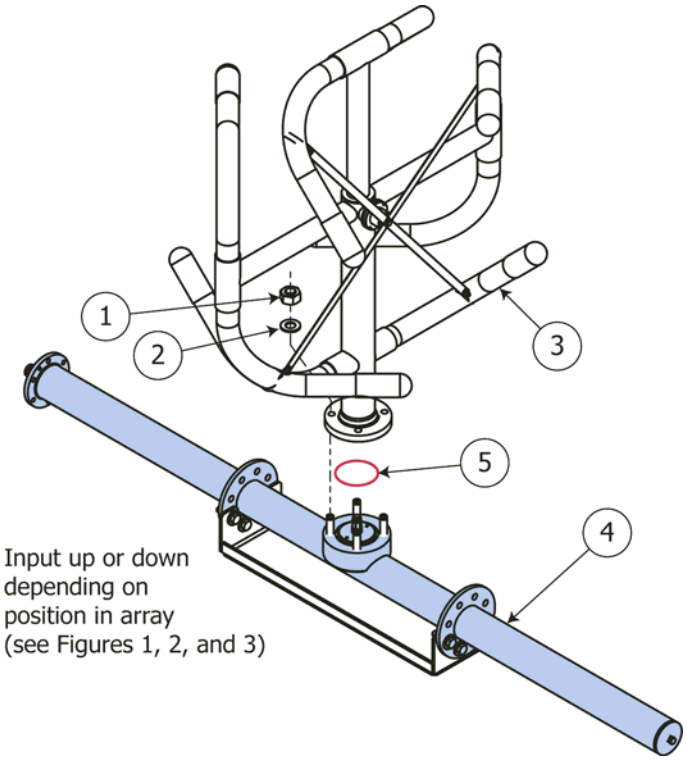

Attach the antenna bays to the feedline sections

a. Using the 5/8" hardware (Figure 5, 1 and 2), attach an antenna bay assembly (3) to the studs on the baymount of a feedline section (4), with a lightly lubricated O-ring (5). Tighten the nuts to 75 lb-ft.

b. Repeat for the other antenna bay(s).

Install the radome (if applicable)

If your antenna does not include radomes, skip this step and go straight to Mounting the Antenna on the Tower on page 11.

Install the radome(s) as follows:

a. Using 3/8" hardware (Figure 6, 41, 42, and 43) threaded into the brass "nut plates" riveted inside the radome top half (44), attach an angled mount plate (45) to the radome top half.

b. Repeat for the radome bottom half (46).

c. Using 1/2" hardware (47, 48, 49, and 50), attach the straight mount plates (51) to the mounting flanges on the feedline section (4). Do not fully tighten at this time.

CAUTION

To ensure proper weather protection, be sure the top radome half, with the overlapping outer flange, is installed at the top of the bay.

d. Fit the radome halves around the installed antenna bay. Using 1/2" galvanized hardware (47, 48, 49, and 50), attach the angled mount plates to the straight mount plates. Do not tighten fully yet.

e. Using the 1/4" hardware (52, 53, 54, and 55), attach the edge flanges of the radome halves to each other.

f. After all the hardware is in place, tighten the 3/8" and 1/2" mount plate hardware and the 1/4" radome flange hardware.

g. Using the Dow Corning 744 sealant (56), seal the opening in the radome around the baymount.

h. Repeat for the other antenna bay(s).

Figure 6. Mount the radome over the antenna bay.

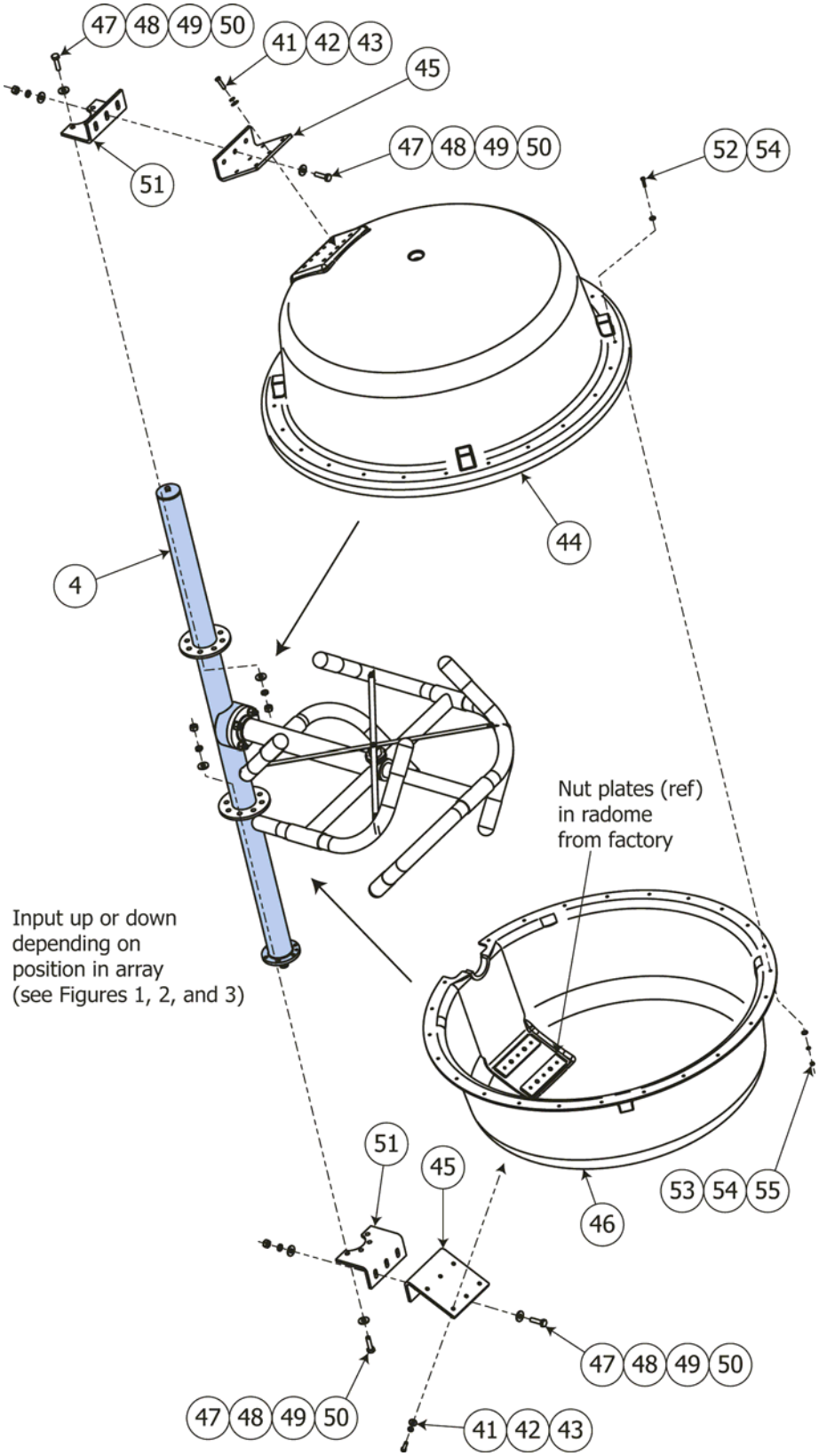

Figure 7. Apply sealant to the radome opening around the baymount.

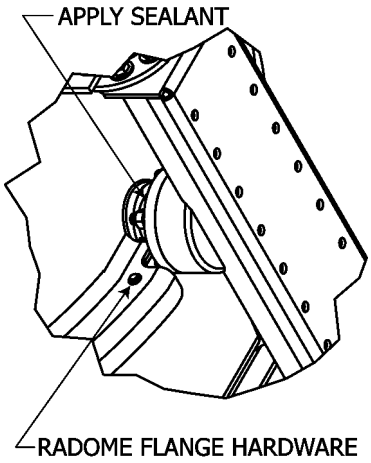

Attach the back support mount

NOTE

Use shims or washers as necessary to fit the back support mount to the mount flanges.

a. Using the 1/2" galvanized hardware (Figure 8, 6, 7, 8, and 9), attach the back support mount (10) to the mounting flange on the feedline (4). Tighten to 57 lb-ft.

b. Repeat for the other antenna bay(s).

Figure 8. Mount the back support mount onto the feedline.

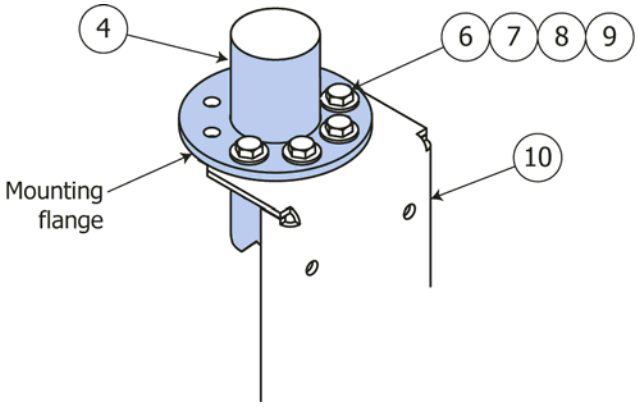

3 Mounting the Antenna on the Tower

NOTE

Mounting configurations (and part numbers) will vary, depending on your tower, your mounting scheme, and the locations of any obstructions, such as cross-members or guy wires.

Standard are the "face-mount" and the "pick-up-two-legs" configurations, shown in Figure 9. Your "Figure 2" sketch shows the setup specially designed for your situation, which may vary from either standard.

Figure 9. Standard mounting configurations

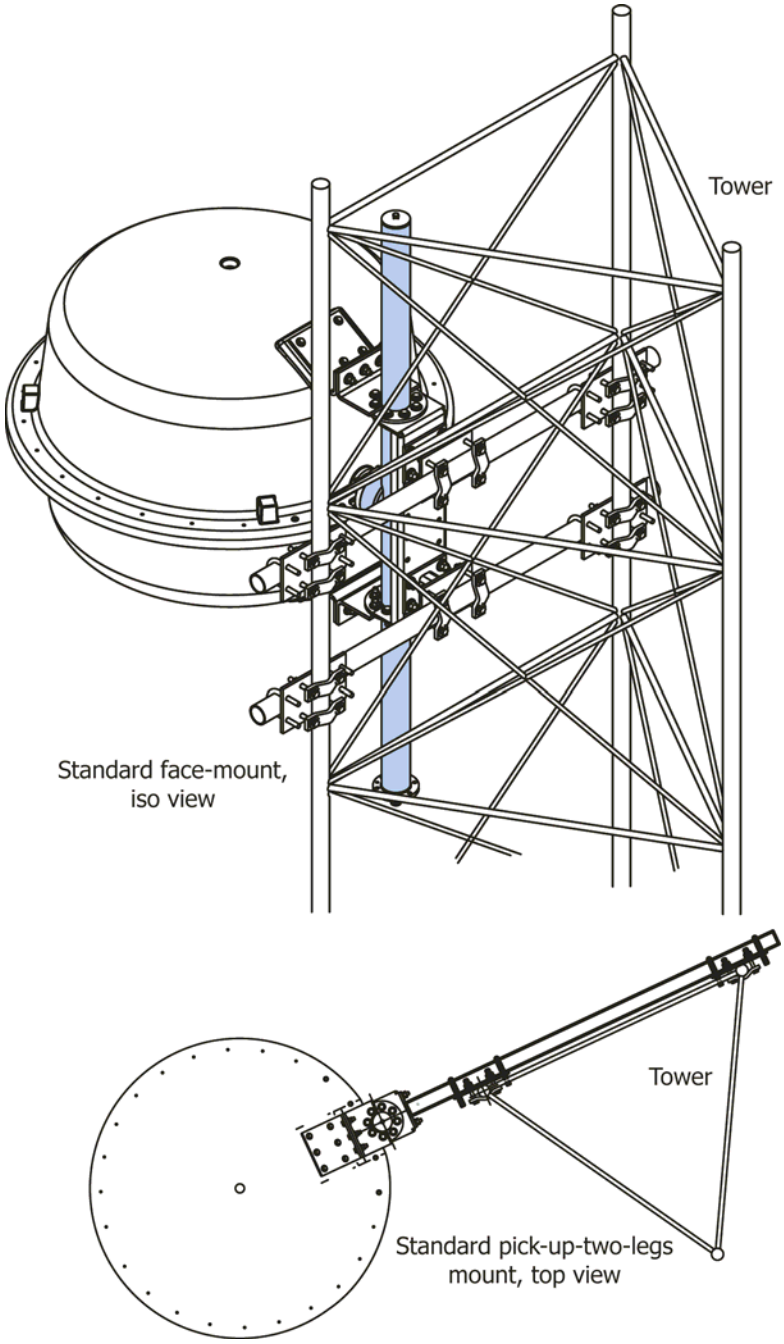

Assemble the mounting structure(s)

a. Using 1/2" galvanized hardware (Figure 10, items 6, 7, 8, and 9), attach two support weldments (11) to the back support mount (10) on each feedline section (4). Tighten to 57 lb-ft.

b. Using the crossover plates (12) with U-bolts (13), clamp halves (14), and 1/2" x 4" galvanized bolts (15) with galvanized hardware (7, 8, and 9), mount the horizontal pipes (16) at the location(s) you marked on the tower leg or outrigged pole. Tighten the hardware to 57 lb-ft.

Figure 10. Mounting structure components

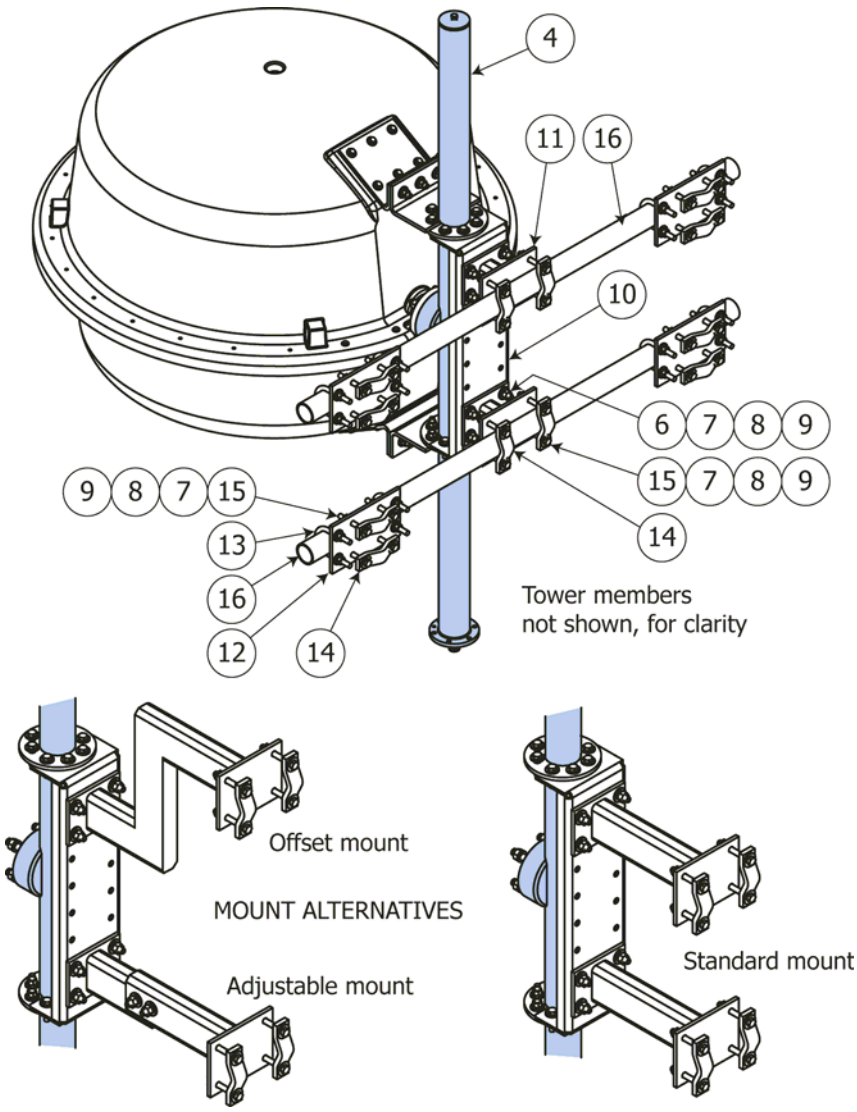

Mount the antenna onto the mounting structure.

Important

Handling the assembly by any part of the bay or the radome may cause damage to the bay or its feedstraps and may result in poor antenna performance.

a. Supporting the weight of the antenna assembly ONLY by the back support mount (Figure 11), lift the assemblies into position on the tower.

Figure 11. Lifting the antenna

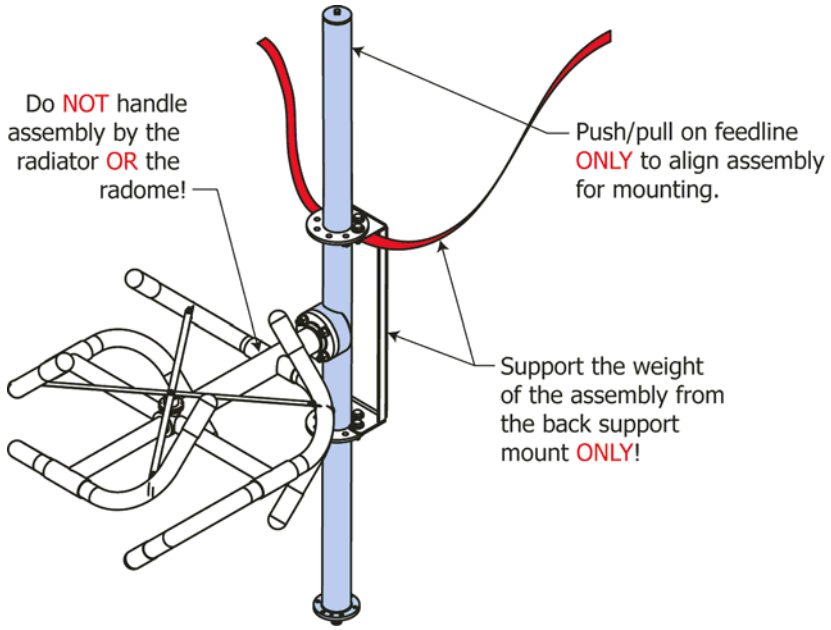

b. Using clamp halves (Figure 10, item 14) and 1/2" x 4" galvanized bolts (15) with hardware (7, 8, and 9), attach the support weldments onto the horizontal pipes. Tighten the hardware to 57 lb-ft.

c. Repeat for the other antenna bay(s).

NOTE

The antenna heading (azimuth) is controlled by the mounting structure and is not adjustable at installation.

4 Connecting the Antenna (2-, 4-, or 6-bay)

NOTE

Prior to starting this section, the antenna bay & feedline assemblies must have been mounted in accordance with Mounting the Antenna on the Tower.

A single-stage feed (single power divider) distributes the power among its antenna bays by the use of one power divider:

- 2 bays: one two-way power divider (21)
- 4-bays: one four-way power divider (22)
- 6-bays: one six-way power divider (23)

... and a feed cable for each antenna bay:

- 2 bays: two cables (24)
- 4 bays: four cables (24)
- 6 bays: six cables (24)

You need to provide a transmission line from your transmitter, terminated with a 3-1/8" EIA flange.

Mount the power divider

a. Using two power divider mounting kits (Figure 12, 25) or custom mounts if applicable, mount the power divider onto the mounting structure with its outlet ports roughly halfway between the center antenna bays.

Figure 12. Power divider mounting

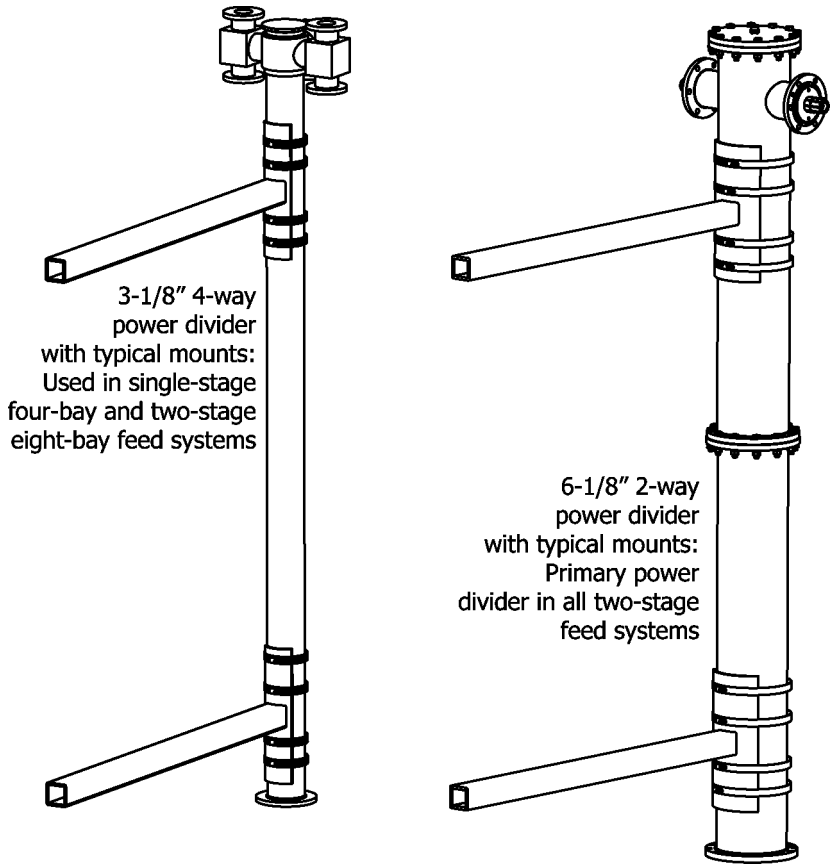

Connect, loop, and secure the feedline cables.

CAUTION

Stressing a coax connection after assembly can detune the system. Therefore, never make a connection and then bend or twist the cable, or use the connector to force the coax into shape. Form the cable first, then attach it to the connector.

CAUTION

The minimum bending radius for 7/8" coax is 5" (12.7 cm). Do not bend it too tightly; you may damage it.

CAUTION

Do not overtighten the connectors. Overtightening may damage them.

a. Using 3/8" stainless hardware (Figure 13, items 17, 18, and 19), install a 3-1/8" - 1-5/8" adapter (20) to the input flange of a feedline section (4), with a new, lightly lubricated O-ring (26)

NOTE

This adapter may be shipped already installed in some cases.

b. Using 5/16" stainless hardware (27, 28 and 29), connect the output end of each cable (24) to the studs on one of the adapters, with a new, lightly lubricated O-ring (30). Tighten the flange hardware to 5 lb-ft (0.75 kg-m).

Figure 13. Connect the feedline.

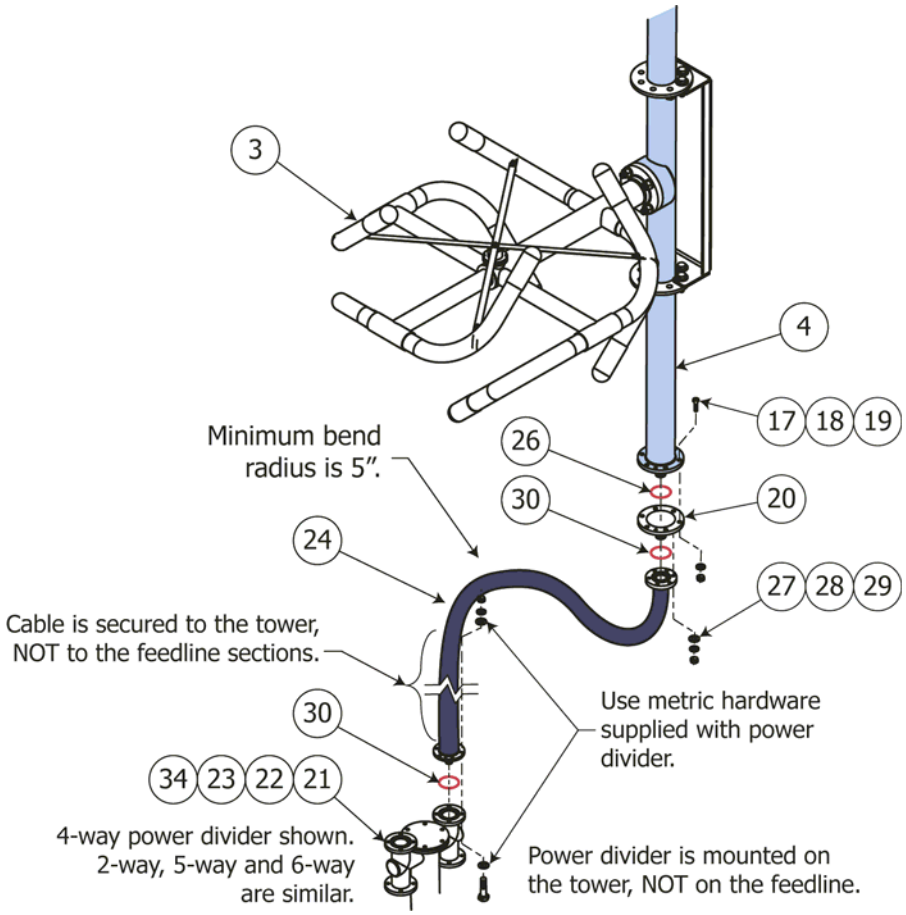

Figure 14. Loop and secure the feedline cables

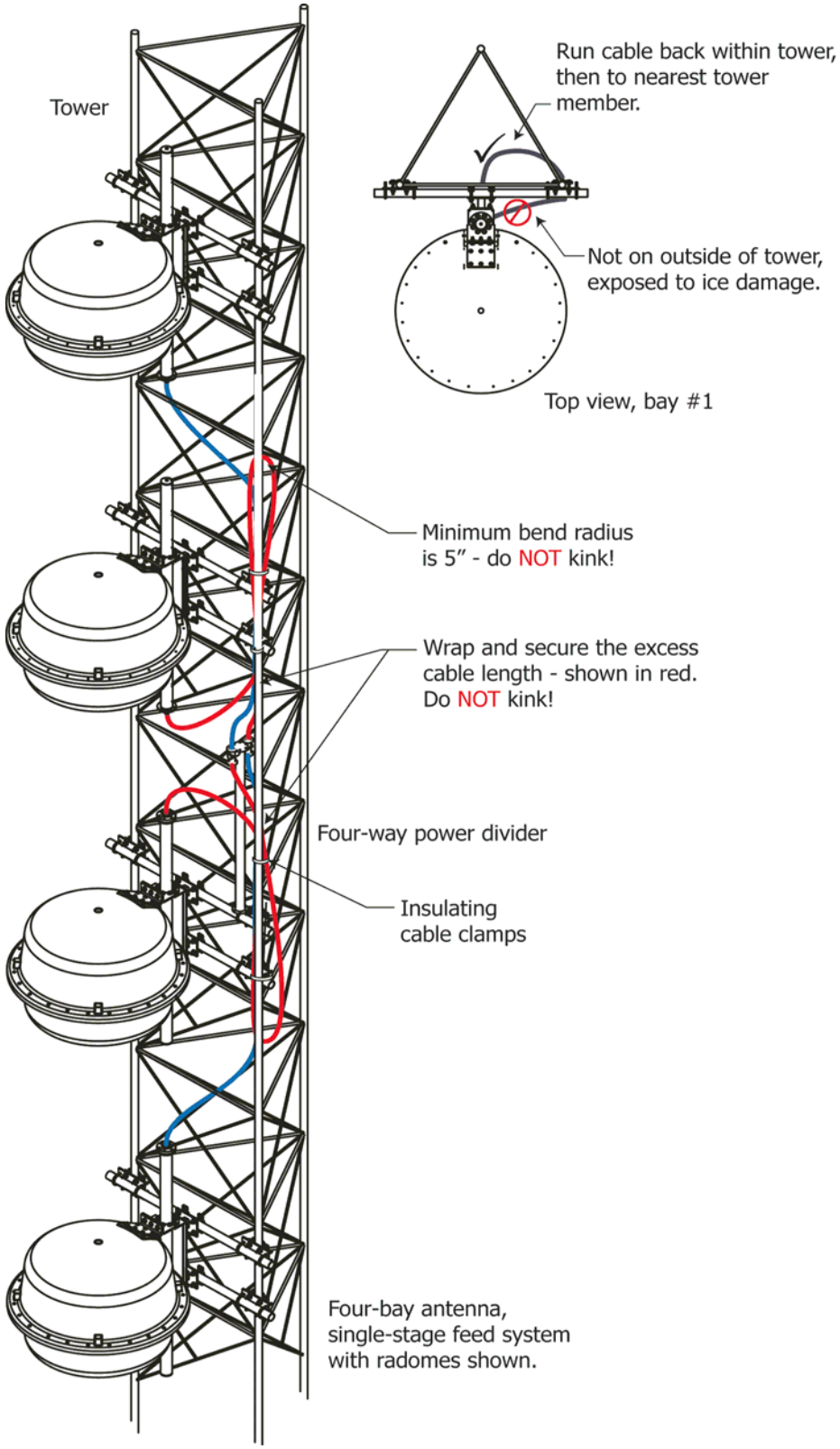

CAUTION

Do NOT form the excess cable into a coil. This will adversely affect antenna VSWR.

c. Form the excess cable into loops (Figure 14, shown in red), along the mounting pole or tower leg as shown.

d. Using the metric hardware provided with the power divider (see Figure 13), connect the input end of each cable to one of the outputs of the power divider (21, 22, or 23), with a new, lightly lubricated O-ring (30). Tighten the flange hardware to 5 lb-ft (0.75 kg-m).

e. Repeat for the other antenna bay(s).

f. Secure the cables and the cable loops to the mounting structure to prevent wind or vibration damage, using Shively-supplied cable clamps (31) or an approved equivalent.

Install the transformer and connect the transmission line.

a. Using 3/8" stainless hardware (Figure 15, items 17, 18, and 19), connect the transformer (32) output flange to the input of the power divider (21, 22, or 23), with a lightly lubricated O-ring (26). Torque the flange hardware 9 lb-ft (1.2 kg-m).

b. Connect the transmission line to the transformer input flange, with a new, lightly lubricated O-ring (26). Tighten the flange hardware to 9 lb-ft (1.2 kg-m).

c. Secure the transmission line to the mounting structure, to prevent damage due to wind, weight, and vibration.

Figure 15. Transmission line connection

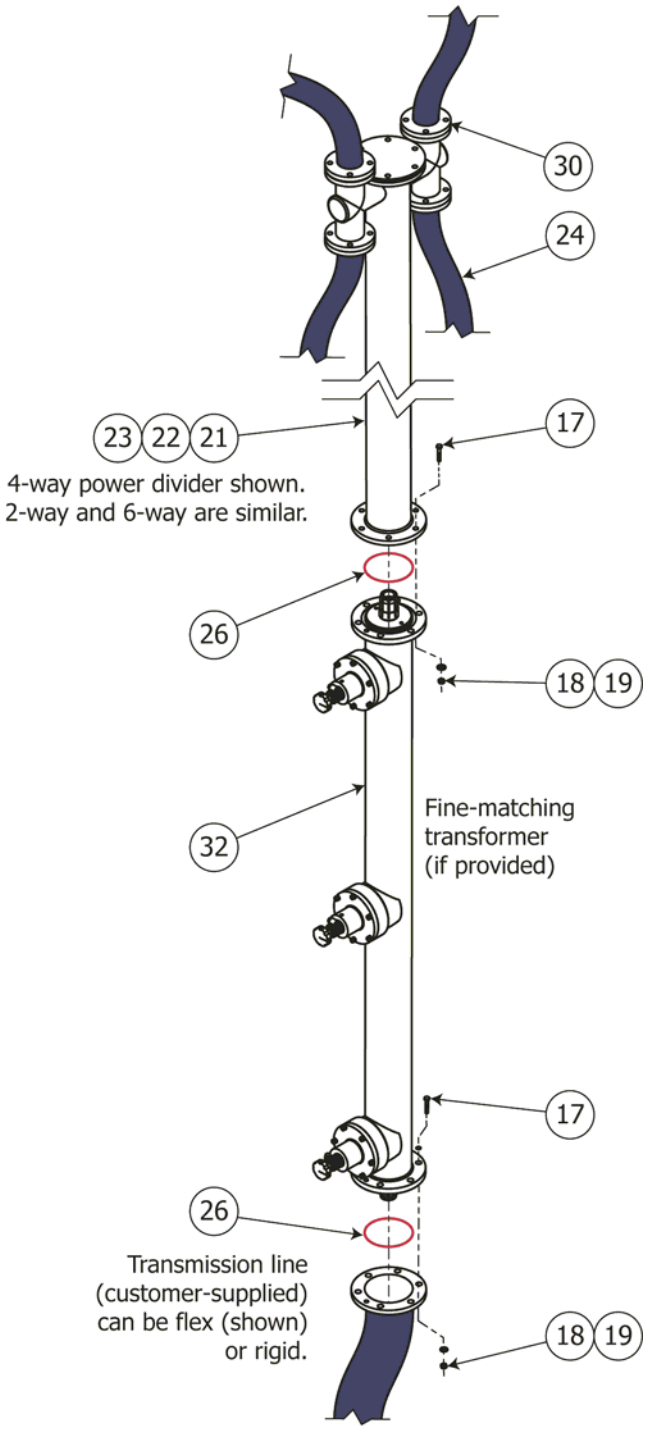

Installation of your 2-, 4-, or 6-bay Model 6828 antenna is complete. Please proceed to Pressurization and Startup on page 27.

NOTE

If you have any problems with installation, call Shively and talk with a designer or Sales.

5 Connecting the Antenna (8-, 10- or 12-bay)

NOTE

Prior to starting this section, the antenna bay & feedline assemblies must have been mounted and their heading adjusted in accordance with Chapter 2.

A two-stage feed distributes the power among its antenna bays by the use of a primary power divider and two or more secondary power dividers (Figure 16):

- 8 bays: a two-way primary power divider (33) feeding two four-way secondary power dividers (22)
- 10-bays: a two-way primary power divider (33) feeding two five-way secondary power dividers (34)
- 12-bays: a two-way primary power divider (33) feeding two six-way secondary power dividers (23)

... and a feed cable for each antenna bay:

- 8 bays: eight cables (24)
- 10 bays: ten cables (24)
- 12 bays: twelve cables (24)

You need to provide a transmission line from your transmitter, terminated with a 6-1/8" EIA flange.

Assemble the feed system.

a. Using two power divider mounting kits (35) or custom mounts if applicable, mount the large 6-1/8" to 3-1/8" power divider (Figure 16, 33) onto the mounting structure with its outlet ports roughly halfway between the center antenna bay inputs.

b. Using 3/8" stainless hardware (17, 18, and 19), attach the elbows (36) to the power divider outputs, with new, lightly lubricated O-rings (26).

c. Using 3/8" stainless hardware (17, 18, and 19), attach the coax line sections (37) to the elbows, with new, lightly lubricated O-rings.

d. Using 3/8" stainless hardware (17, 18, and 19), attach the two transformer (32) input flanges onto the coax line sections, with lightly lubricated O-rings (26).

e. Using 3/8" stainless hardware (17, 18, and 19), assemble the small 3-1/8" power dividers (22, 34, or 23) onto the transformer outputs, with new, lightly lubricated O-rings.

f. Tighten all the 3-1/8" flange hardware to 17 lb-ft (2.3 kg-m).

g. Using four power divider mounting kits (25), mount the small power dividers onto the mounting structure.

h. Use additional mounts (supplied with the antenna) to support the coax line sections (37) between the 6-1/8" 2-way and the 3-1/8" power dividers.

Figure 16. Typical two-stage feed system

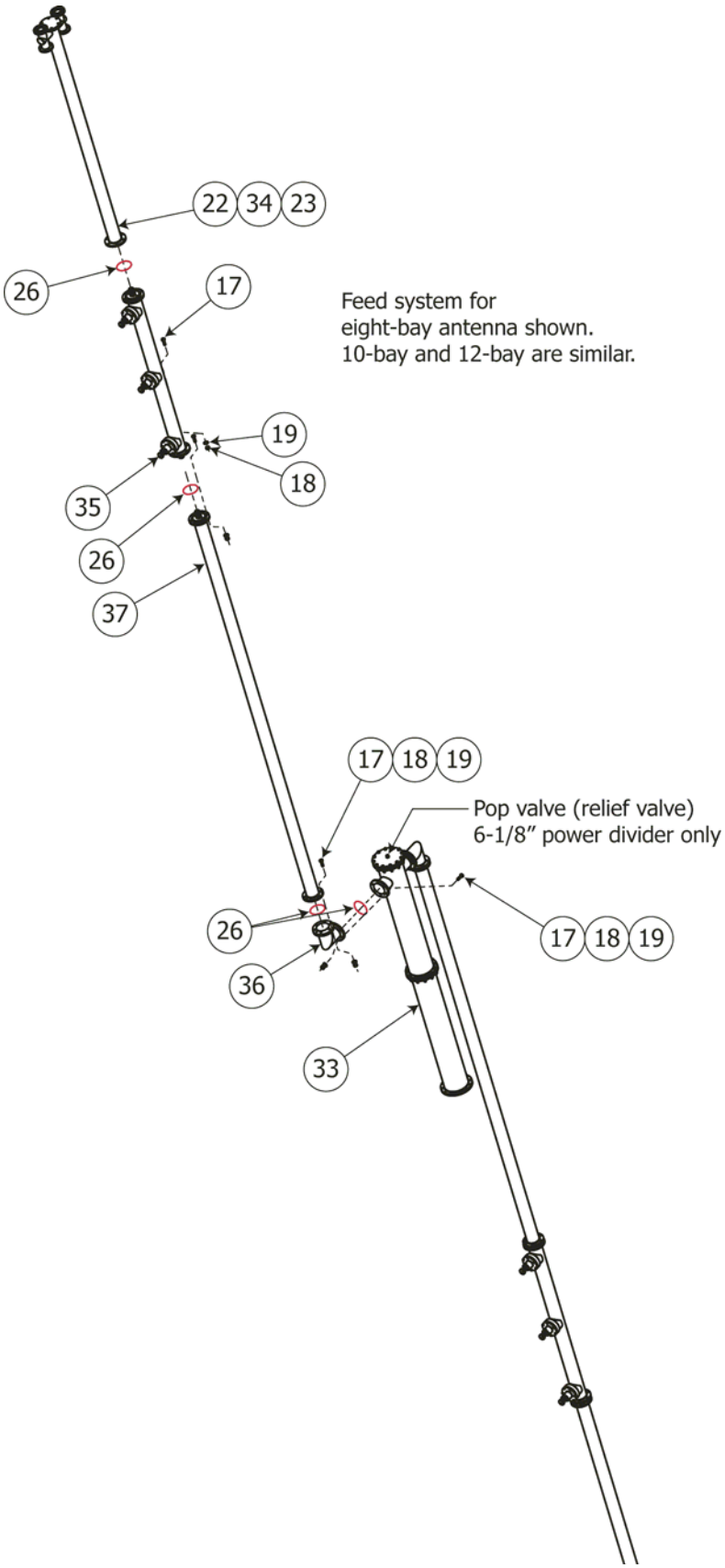

Connect, loop, and secure the feedline cables.

CAUTION

Stressing a coax connection after assembly can detune the system and compromise reliability. Therefore, never make a connection and then bend or twist the cable, or use the connector to force the coax into shape. Form the cable first, then attach it to the connector.

CAUTION

The minimum bending radius for 7/8" coax is 5" (12.7 cm). Do not bend it too tightly; you may damage it.

CAUTION

Do not overtighten the connectors. Overtightening may damage them.

a. Using 3/8" stainless hardware (Figure 17, 17, 18, and 19), install a 3-1/8" - 1-5/8" adapter (20) to the input flange of a feedline section (4), with a new, lightly lubricated O-ring (26).

NOTE

This adapter may be shipped already installed in some cases.

b. Using 5/16" stainless hardware (27, 28, and 29), connect the output end of each cable to one of the adapters, with a new, lightly lubricated O-ring (30). Tighten the flange hardware to 5 lb-ft (0.75 kg-m).

Figure 17. Connect the feedline.

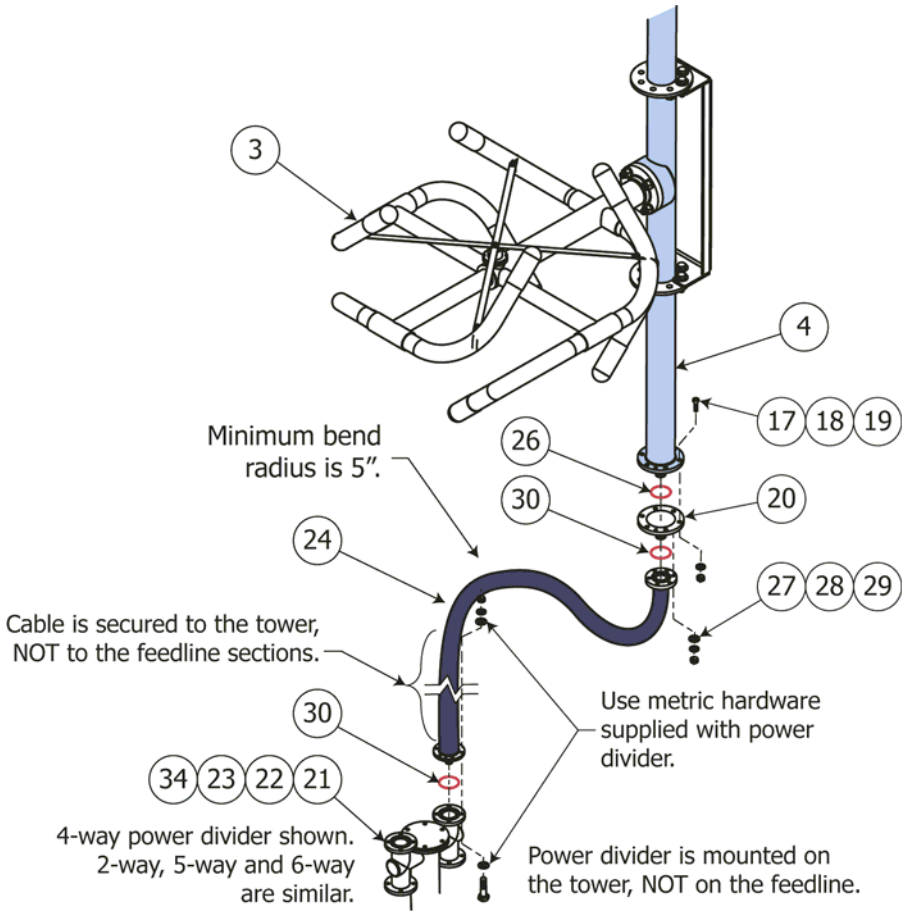

Figure 18. Loop and secure the feedline cables

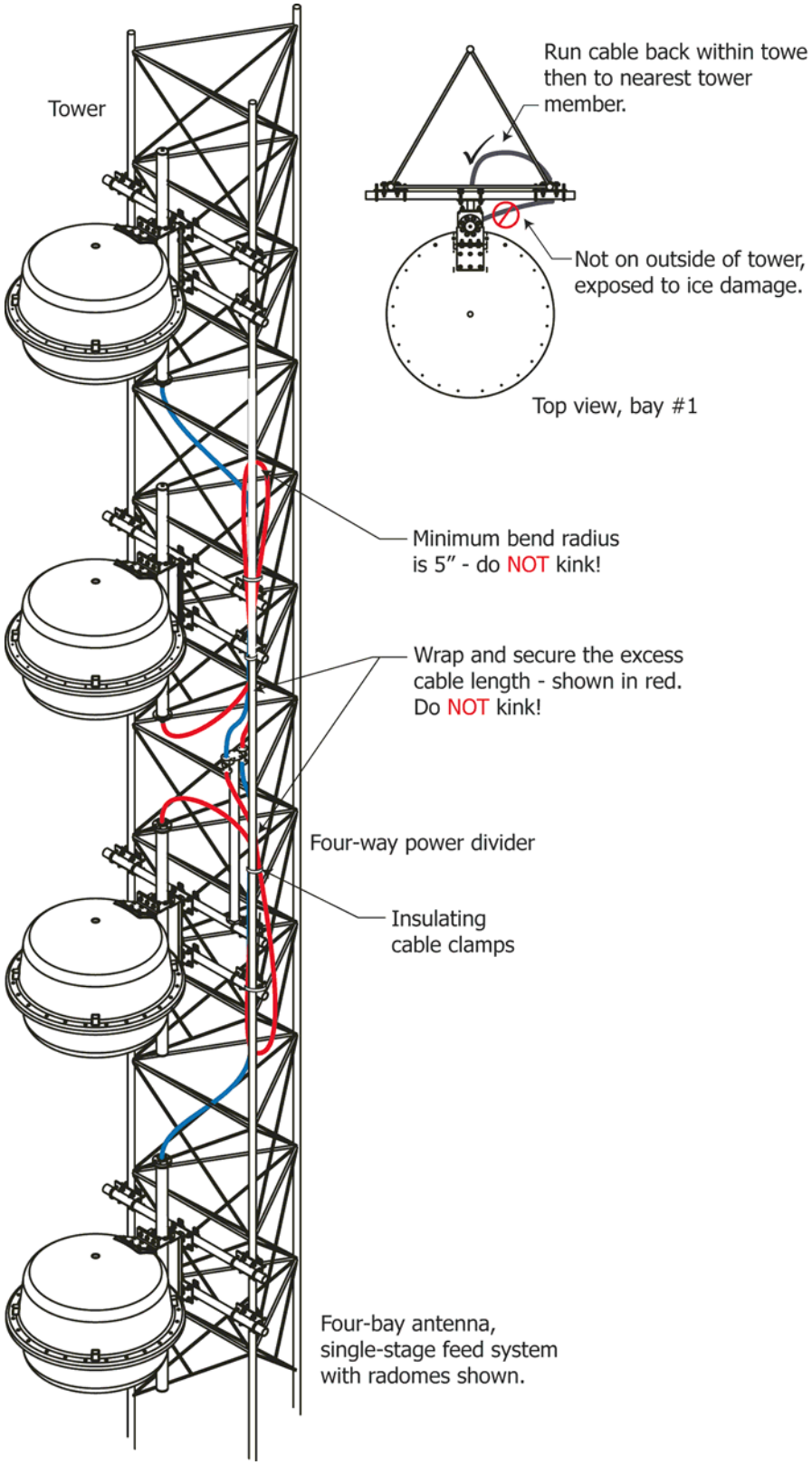

CAUTION

Do NOT form the excess cable into a coil. This will adversely affect antenna VSWR.

c. Form the excess cable into loops (Figure 18, shown in red), along the mounting pole or tower leg as shown.

d. Using the metric hardware provided with the power divider (see Figure 17), connect the input end of each cable to the output of one of the small secondary power dividers (22, 34, or 23), with a new, lightly lubricated O-ring (Figure 17, 30). Tighten the flange hardware to 5 lb-ft (0.75 kg-m).

e. Repeat for the other antenna bay(s).

f. Secure the cables and the cable loops to the mounting structure to prevent wind or vibration damage, using Shively-supplied cable clamps (31) or an approved equivalent.

Connect the transmission line.

a. Using 3/8" hardware (Figure 19, 38, 18, and 19), connect the transmission line to the input of the primary power divider, with a new O-ring (39). Torque the flange hardware to 18 - 22 lb-ft (2.4 - 3 Pa).

b. Secure the transmission line cable to the mounting pole or tower leg, using customer-supplied cable clamps.

Figure 19. Transmission line connection

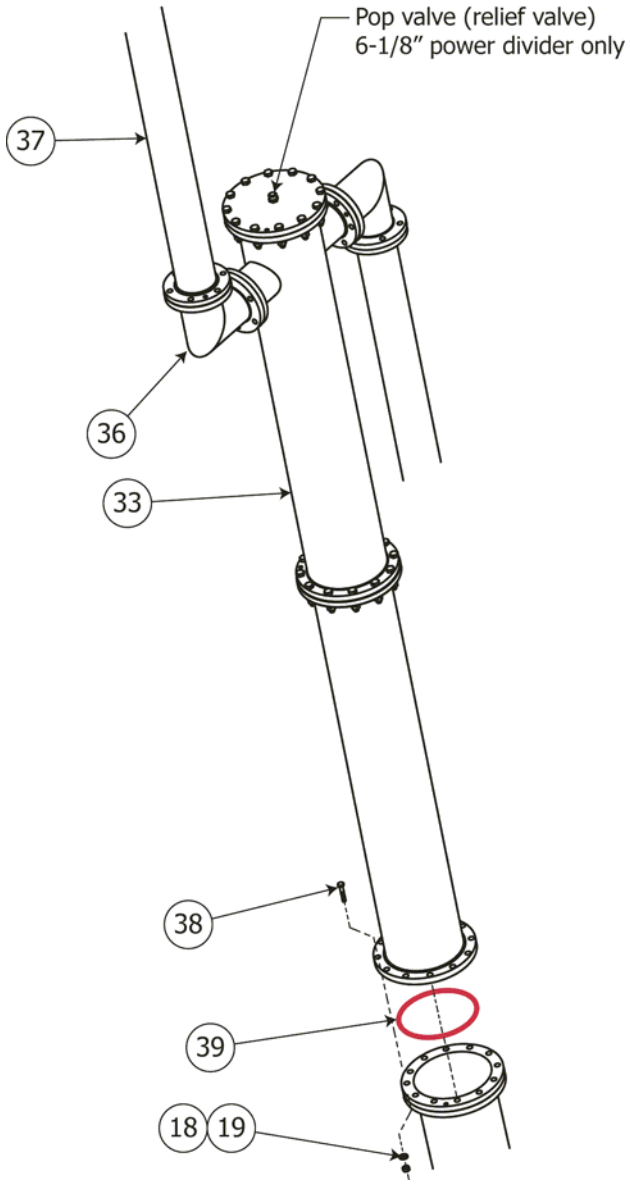

Installation of your 8-, 10-, or 12-bay Model 6828 antenna is complete. Please proceed to Pressurization and Startup on page 27.

NOTE

If you have any problems with installation, call Shively and talk with a designer or Sales.

6 Pressurization and Startup

WARNING

Whenever a rigger is on the tower in the area of the antenna, shut off the signal and lock it off so that it cannot be turned on accidentally. RF emissions at close range are hazardous.

After the antenna is installed and all lines are connected, it is necessary to check the system for leaks, purge with dry gas to remove all moisture, and leave the system pressurized with dry gas to avoid future infiltration of moisture. These steps must be taken before RF power is applied to the system.

Before beginning pressurization:

Important

Shively Labs will not accept responsibility for antenna failure after operation without proper purging or positive pressure of dry air or dry nitrogen.

CAUTION

When pressurizing the system, never use a "garage" air compressor, as it will not clean the air and will blow both moisture and contaminants such as oil and graphite into the coaxial system.

Be sure to use a good quality pressure gauge which will read accurately in the 10 - 20 psig range; don't depend on the cylinder gauge, which will not be accurate at a low pressure.

Do not over-pressurize the system; it takes time for the entire system to fill with the new pressure and the pressure gauge to stabilize.

CAUTION

If all moisture is not removed from the interior of the system, it will condense when the weather cools. The condensed moisture (water) will cause arcing and permanent physical destruction of the coaxial system, including the transmitter output network.

CAUTION

Never operate the antenna system without proper purging and constant positive dry gas pressure.

Test for leaks.

a. Connect a source of dry gas (cylinder nitrogen or air from a compressor-dehydrator) to the system as shown in Figure 20 on page 28.

b. Be sure to include a good quality gauge which reads accurately in the 5 - 20 psig (35 - 135 kPa) range; don't depend on the cylinder gauge, which will not be accurate enough in this pressure range.

c. Pressurize the system to eight (8) psig, then close the shutoff valve. Give the system one half hour to stabilize, then record the pressure and the temperature.

Figure 20. Pressurized gas schematic

Pressure Correction:

where P_C = corrected final pressure

Fahrenheit:

$$P_C \text{ (in psig)} = \frac{(P_R + 14.7)(T_1 + 460)}{(T_2 + 460) - 14.7}$$

Celsius:

$$P_C \text{ (in kPa)} = \frac{(P_R + 101.3)(T_1 + 273)}{(T_2 + 273) - 101.3}$$

P_R = final pressure as read

T_1 = beginning temperature

T_2 = final temperature

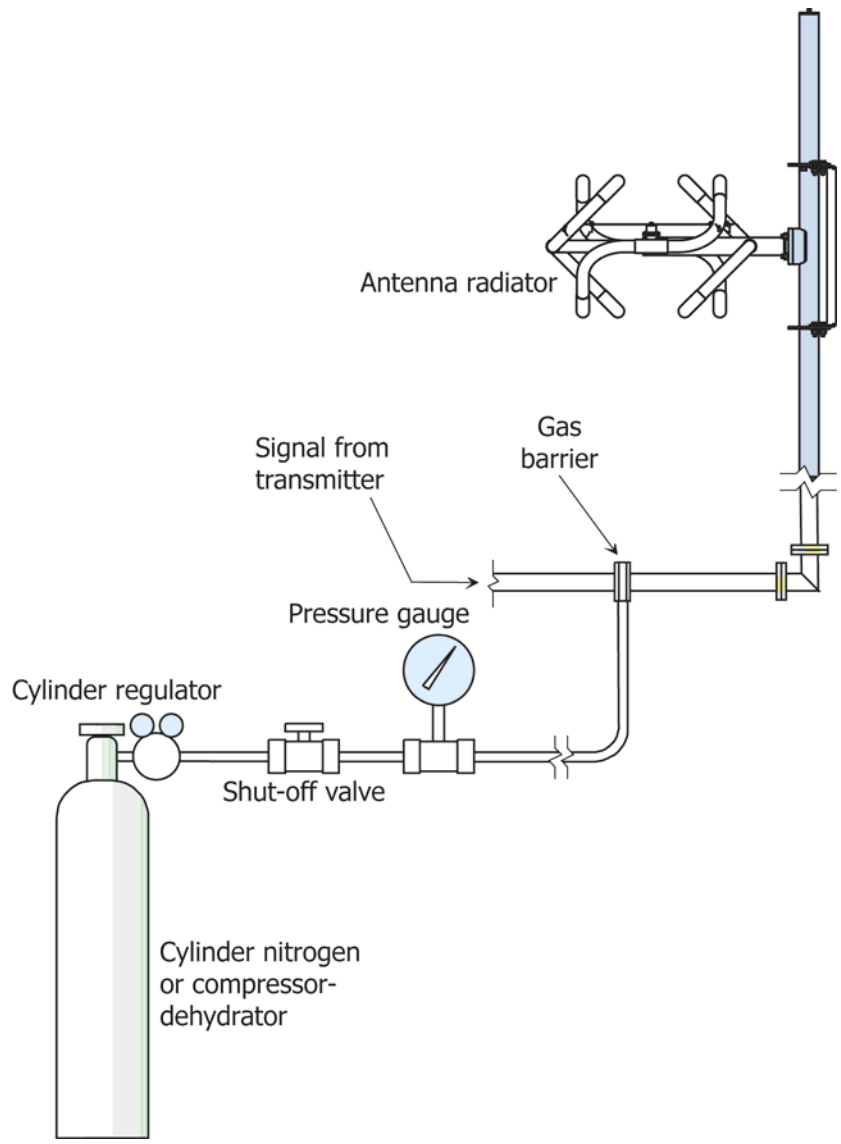

d. Wait twenty-four hours, then read the pressure and the temperature again and use the formula in the sidebar to obtain a corrected pressure for comparison.

e. If the system loses pressure at an unacceptably high rate, re-pressurize it, leaving the gas supply on. A rule of thumb is that the final pressure should not be less than half the initial pressure after twenty-four hours.

f. Find the leak(s), using a leak detector or soap bubbles. (The most common cause of leakage is an O-ring pinched in a flange.)

g. Correct any leaks that are found. Then repeat the leak test until the results are satisfactory.

Purge the system.

When the system is new, and any time that it has been opened, it must be purged with dry gas before operation to eliminate moisture.

The dry gas used may be dry cylinder nitrogen or air from a compressor-dehydrator. Shively Labs suggests a minimum of three volume changes of dry gas for an "average" system.

Purge your system as follows:

a. Determine how wet the system is. If a system carefully protected from weather and assembled in dry weather is average, a system exposed to moisture during storage or installation will be relatively wet.

Important

Never apply transmitter power while the antenna is under vacuum.

b. If you have any liquid water in your transmission line, use a vacuum pump to dry the transmission line. Apply as much vacuum as you can to the system and hold the vacuum for 8 hours. This should remove any liquid water. [A vacuum pump can be rented or borrowed from a refrigeration contractor.]

c. Determine the volume of dry gas to use for the purge.

d. Table 2 shows approximate volumes inside various transmission line coax sizes. You may ignore the volume inside the feedline sections.

Table 2. Volume of Coax per 1000 Feet of Length

Coax Size	Volume
3-1/8"	50 cu. ft. (1.4 m^3)
4-1/16"	90 cu. ft. (2.6 m^3)
6-1/8"	200 cu. ft. (5.7 m^3)

NOTE

A standard nitrogen cylinder (9 inch diameter by 55 inches tall) contains about 200 cubic feet (2.6 m^3) of gas.

e. Connect a source of dry gas (cylinder nitrogen or air from a compressor-dehydrator) to the system as shown in Figure 20 on page 28.

f. Raise the gas pressure to 12 or 13 psig (83 - 90 kPa).

g. Have a rigger go up the tower and loosen (do not remove) the purge plug (40) at the top end of each feedline section. This will be the point where purge gas exits the system.

NOTE

(8-, 10-, and 12-bay antennas) The pop valve (relief valve) at the top of the 6-1/8" power divider will also open under the pressure.

Remember

It is critical to blow dry gas *through* the system, rather than merely maintain a pressure; the gas volume accomplishes the purge.

h. When the calculated amount of dry gas has been blown through the antenna system, maintain gas flow while you have the rigger re-tighten the pipe plugs on the feedline sections. Gas flow should drop as the plugs are tightened.

i. After completion of the purge, reduce the supply pressure to about 5 to 7 psig. As the pressure drops, confirm that the pop valve at the top of the 6-1/8" power divider (if applicable) has closed as well.

Leave the system pressurized.

After the reduced pressure has stabilized, keep careful note of cylinder pressure or compressor-dehydrator running time, to be sure that no large leaks have been overlooked. This is especially important immediately after installation or any subsequent opening and reassembly.

Before beginning initial characterization:

We strongly recommend initial characterization as the best way to identify both initial problems and possible future system damage.

Important

In the days before the hazards of intense RF power were realized, it was common practice to have a technician climb the tower and adjust the impedance match using the transmitter as a signal source and reading the VSWR or return power on the transmitter. This practice MUST NOT be used, as few transmitters can be operated at a low enough power level to avoid exposing the rigger to an unsafe RF level. For reference, see 29 CFR, Section 1910.97, the OSHA standard for exposure to non-ionizing radiation.

To test and adjust VSWR safely, use low-power test equipment, such as a network analyzer or an impedance bridge. If you don't have access to low-power test equipment, please call Shively Labs before proceeding.

WARNING

Whenever a rigger is on the tower in the area of the antenna, shut off the transmitter signal and lock and tag it out so that it cannot be turned on accidentally.

Low-power test equipment should be used to prevent excessive radiation exposure to the person doing the adjusting.

A high transmission line VSWR may indicate damaged transmission line and is likely to cause problems in the future, including serious damage to your equipment.

Read transmission line VSWR.

The first step is to characterize the transmission line by itself

a. Briefly disconnect the transmission line from the antenna system input. Seal the antenna system input to prevent the entry of moisture.

b. Terminate the coax transmission line in an instrument-quality 50-ohm load.

c. Measure and record the voltage standing wave ratio (VSWR) across the operating band. File this information with this manual for future reference.

d. The VSWR of the transmission line should be within the manufacturer's specifications. If it is, proceed. If not, you should call the manufacturer before connecting the antenna. Problems must be worked out with the design engineer on a case-by-case basis.

Read transmission line TDR.

With the transmission line still terminated in 50 ohms, make a time domain reflectometer (TDR) plot. Label and file the plot with this manual.

Read system VSWR.

You tested the VSWR of the transmission line alone. Now test the VSWR of the system as a whole.

a. Remove the load and connect the transmission line to the antenna system input, with an O-ring (26 or 39) to seal the connection.

b. Repeat the purge process after sealing the line, in accordance with Purge the system. on page 29.

c. Measure VSWR. VSWR at this point should be around 1.3 : 1 or better. If it is not, check to be sure all the radiators are functioning (below).

d. Record the reading and file it with this manual.

Check radiator function.

Again using the low-power test equipment to provide a signal to the antenna and read VSWR, have the rigger detune each radiator in turn.

Each time, a deflection in VSWR should be apparent. The deflection for various bays should be similar, but not necessarily identical.

If the VSWR of the array does not change when a radiator is detuned, that bay or associated cable is not functioning. Check to be sure the radiator and cable were installed properly, including the inner conductor connector.

If you cannot find the problem, please call Shively Labs before proceeding.

Trim impedance.

Adjust the transformer (Figure 21) as follows:

a. Loosen the hose clamps on the control rods enough to allow the rods to move.

b. Grasp one of the control rods and slide it in or out about 1/4 inch or 6 millimeters. It will move stiffly because of O-ring friction.

Figure 21. Impedance-matching transformer

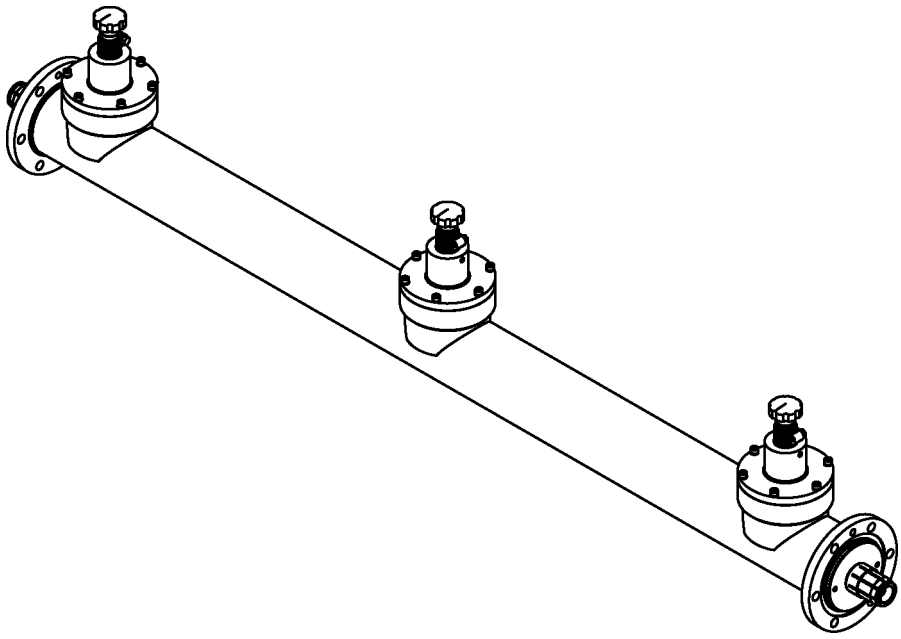

c. Read the VSWR. If the reading went down, move the control rod again in the same direction. If the VSWR went up, move the same rod in the opposite direction. Repeat until no further improvement is seen.

d. Adjust the second and third rods in the same manner.

NOTE

If you get "lost," return all three rods to the factory setting (all the way out) and start over.

e. Return to the first rod, and so forth, until you have the lowest possible VSWR or return power reading. This is the optimal transformer setting at this frequency.

f. VSWR for each frequency at this point should be below 1.2 : 1. If it is not, call Shively Labs to help identify the problem.

g. When you have set the transformer, use a sharp point to scribe the shaft of each control rod where it leaves the flange collar. Record the settings of the control rods and file this information with this manual for future reference.

h. Tighten the hose clamps. If the clamps are left loose, vibration may change the adjustments.

Before beginning checkout:

Before beginning checkout of the antenna system, be sure the following items have been done:

- The antenna system has been installed in accordance with this manual and the installation drawing.
- All radiators are operating and VSWR is within specification.
- The initial characterization data have been recorded.
- The system is gas-tight, purged, and pressurized.

Check out.

Check the system out as follows:

a. Bring up RF power slowly and observe transmitter readings, stability, and general operation.

b. Run at about half power for at least an hour, reading forward and reflected power, stability, etc.

c. If the system is stable and seems to be operating properly, bring it up to full power. Take initial readings, and repeat the readings periodically.

Performance readings should not change, and there should be no evidence of abnormal heating in the antenna system.

If any problem is found, fix it now. Call Shively Labs if you need help or advice.

Operate.

Once the antenna has been installed and VSWR has been optimized, simply apply the transmitter signal. Don’t exceed the rated power of the antenna.

Figure 22. Apply the signal.

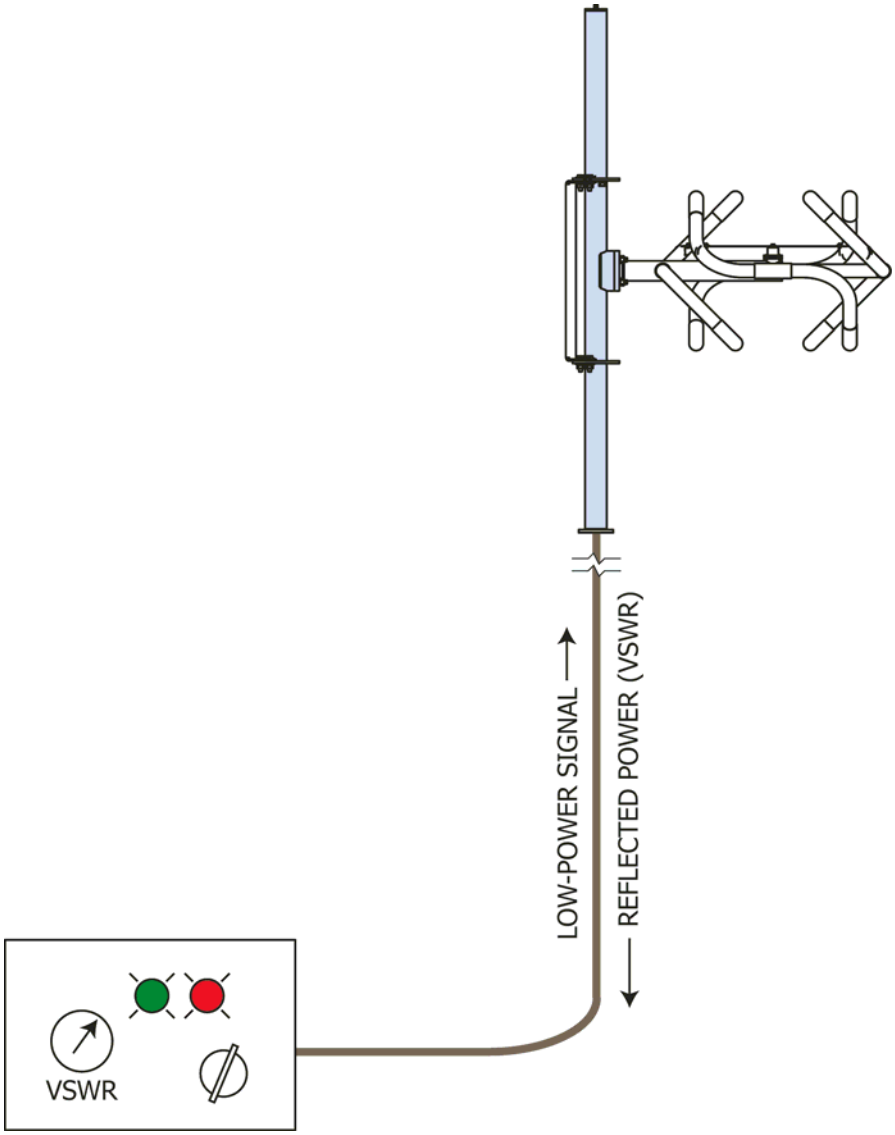

7 Maintenance

WARNING

Whenever a rigger is on the tower in the area of the antenna, shut off the signal and lock it off so that it cannot be turned on accidentally. RF emissions at close range are hazardous.

Log

We recommend that you keep a log of VSWR readings and any other performance notes and maintenance history for your antenna. Such a record can be invaluable for troubleshooting.

Inspection

Annually, or whenever a rigger is on the tower for any reason, have him check your antenna for general condition, looseness of connectors, cable clamps, and mounts, and electrical damage.

Paint

The radiator should never be painted; this will affect the VSWR.

Return Policy

When returning any material to the factory, be sure to call your salesperson and obtain an returned materials authorization (RMA) number first. Material may be refused and sent back to you at your expense if you don't do this.

8 Troubleshooting

Broad Spectrum RF Noise

This indicates that some component is not in good electrical contact with the tower. Make sure mounts are tight, that tower paint has been removed from under the mounts, and that components of other systems are likewise in good contact with the tower.

High VSWR

This is caused by any factor that changes the impedance match between the antenna and the transmitter. Look for:

- Defective RF connector. Make sure connectors are in good shape, and that center pins are not bent over.
- Damage to any antenna components.
- Paint on radiators.
- Ice buildup on radiators.
- Interference from other tower components, especially components broken by wind or ice.

Change in Coverage

This may be caused by the same factors that can cause high VSWR. Look for VSWR changes as well.

Do recognize, however, that apparent changes in coverage may be due to subjective factors or faults of the receiving equipment. Before doing more than checking the VSWR, be sure that an actual coverage change has occurred.

9 Parts

Parts list.

NOTE

Item callouts are consistent across all the illustrations in this technical manual.

Table 3. Parts List, (Radomes excluded)

NOTE

See Table 4 on page 42 for radome parts.

NOTE

All cables are 7/8" air flex with 1-5/8" EIA flanges, both ends.

Description	Qty per antenna system						Shively P/N	Appearance (not to scale)
	2 bay	4 bay	6 bay	8 bay	10 bay	12 bay		
1. Nut, hex 5/8-11 SS (baymount)	8	16	24	32	40	48	05/8-11SS	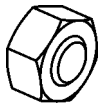
2. Washer, lock 5/8" SS	8	16	24	32	40	48	05/8SSS	
3. Bay assembly	2	4	6	8	10	12	99455-G501, -G502, or -G503	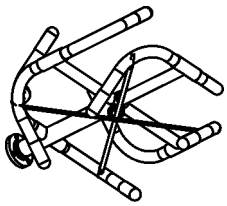
4. Feedline section	2	4	6	8	10	12	99633-G501	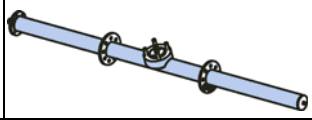
5. O-ring (baymount flange)	2	4	6	8	10	12	9068-340	
6. Bolt, hex 1/2-13 x 2" galvanized (mounting system)	16	32	48	64	80	96	G1202	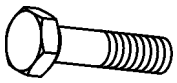
7. Nut, hex 1/2-13 galvanized	32	64	96	128	160	192	G12NUT	
8. Washer, flat 1/2" galvanized	64	128	192	256	320	384	G12FW	
9. Washer, lock 1/2" galvanized	32	64	96	128	160	192	G12LW	
10. Mount, back support	2	4	6	8	10	12	99637-01	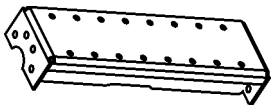

Table 3. Parts List, (Radomes excluded)

NOTE

See Table 4 on page 42 for radome parts.

NOTE

All cables are 7/8" air flex with 1-5/8" EIA flanges, both ends.

Description	Qty per antenna system						Shively P/N	Appearance (not to scale)
	2 bay	4 bay	6 bay	8 bay	10 bay	12 bay		
11. Weldment, horizontal pipe to back support	4	8	12	16	20	24	Various; depends on installation	Illustration to be provided later.
12. Plate kit, crossover	Various; depends on installation						Various; depends on installation	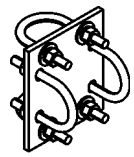
13. U-bolt, 1/2-13, galvanized, with nuts, flat washers, and lock washers	Various; depends on installation						UB1212	
14. Clamp half, bolt spacing 4-1/16"	Various; depends on installation						SCP	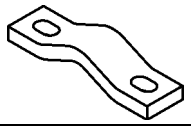
15. Bolt, hex head 1/2-13 x 4" long galvanized	Various; depends on installation						G1204	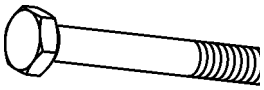
16. Pipe, 2" NPT x 63 inches long, galvanized ("horizontal pipe")	4	8	12	16	20	24	P263	
17. Screw, hex head 3/8-16 x 1-3/4 SS (3-1/8" EIA flange)	6	6	6	48	48	48	03/8-16SS028HM	
18. Nut, hex 3/8-16 SS	6	6	6	48	48	48	03/8-16SS	
19. Washer, lock 3/8" SS	6	6	6	48	48	48	03/8SSS	
20. Adapter, 3-1/8" to 1-5/8"	2	4	6	8	10	12	318F-630	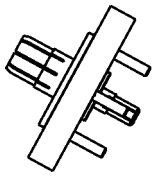
21. Power divider, 2-way, 3-1/8" EIA female input x 1-5/8" EIA male outputs	1						318F-158F x 2	
22. Power divider, 4-way, 3-1/8" EIA female input x 1-5/8" EIA male outputs		1		2			318F-158F x 4	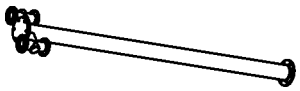

Table 3. Parts List, (Radomes excluded)

NOTE

See Table 4 on page 42 for radome parts.

NOTE

All cables are 7/8" air flex with 1-5/8" EIA flanges, both ends.

Description	Qty per antenna system						Shively P/N	Appearance (not to scale)
	2 bay	4 bay	6 bay	8 bay	10 bay	12 bay		
23. Power divider, 6-way, 3-1/8" EIA female input x 1-5/8" EIA male outputs			1			2	318F-158F x 6	Illustration to be provided later.
24. Cable, 7/8" air flex with 1-5/8" terminations	2	4	6	8	10	12	99459 Various	Illustration to be provided later.
25. Kit, 3-1/8" power divider mount	2	2	2	4	4	4	Varies	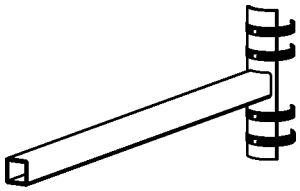
26. O-ring (3-1/8" EIA flanges)				8	8	8	9068-340	
27. Screw, hex head 5/16-18 x 1-1/2" SS (1-5/8" coax flanges)	8	16	24	32	40	48	05/16-18SS024HM	
28. Nut, Hex 5-1/6-18 SS	8	16	24	32	40	48	05/16-18SS	
29. Washer, lock 5/16" SS	8	16	24	32	40	48	05/16SSS	
30. O-ring (1-5/8" EIA flanges)	4	8	12	16	20	24	9068-328	
31. Cable clamp, insulating	Various; depends on installation						92276-01	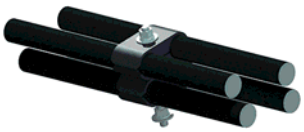
32. Transformer, impedance-matching (if provided)	1	1	1	2	2	2		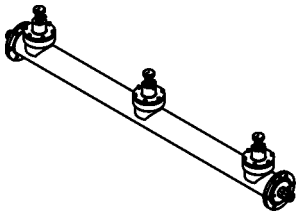
33. Power divider, 2-way, 6-1/8" EIA female input x 3-1/8" EIA male outputs				1	1	1	98834-G503	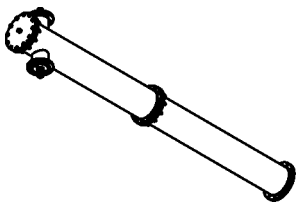

Table 3. Parts List, (Radomes excluded)

NOTE

See Table 4 on page 42 for radome parts.

NOTE

All cables are 7/8" air flex with 1-5/8" EIA flanges, both ends.

Description	Qty per antenna system						Shively P/N	Appearance (not to scale)
	2 bay	4 bay	6 bay	8 bay	10 bay	12 bay		
34. Power divider, 5-way, 3-1/8" EIA female input x 1-5/8" EIA male outputs					2		318F-158F x 5	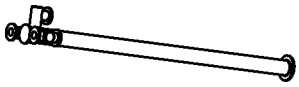
35. Kit, 6-1/8" power divider mount				2	2	2	Varies	
36. Elbow, 90° 3-1/8", EIA female input x EIA male output				2	2	2	51236-G506	
37. Coax, 3-1/8", EIA female input x EIA male output, XXX in long				2	2	2	51960-G5XX-XXX (Varies)	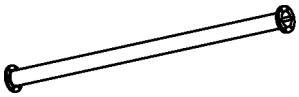
38. Screw, hex head 3/8-16 x 2" SS (6-1/8" coax flange)				12	12	12	038-16SS032HM	
39. O-ring (6-1/8" EIA flanges)				1	1	1	9068-438	
40. Plug (part of feedline, item 4)	2 ref	4 ref	6 ref	8 ref	10 ref	12 ref	Commercial brass, 1/4" NPT	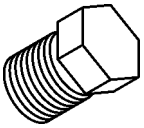

Table 4. Parts List, Radome Assembly

Description	Qty per antenna bay	Shively P/N	Appearance (not to scale)
41. Screw, hex head 3/8-16 x 1-1/2 SS (radome mount plates to radome)	12	038-16SS024HM	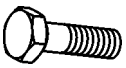
42. Washer, flat 3/8" SS	12	038SSF	
43. Washer, lock 3/8" SS	12	038SSS	

Table 4. Parts List, Radome Assembly (continued)

Description	Qty per antenna bay	Shively P/N	Appearance (not to scale)
44. Radome top half (overlapping flange)	1	99454-G502	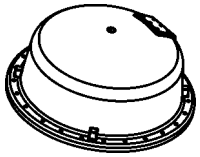
45. Angled mount plate (~60°)	2	99453-03	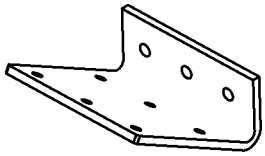
46. Radome bottom half (flange fits inside top half flange)	1	99454-G503	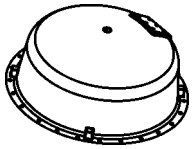
47. Bolt, hex 1/2-13 x 2" galvanized	15	G1202	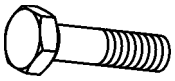
48. Nut, hex 1/2-13 galvanized	15	G12NUT	
49. Washer, flat 1/2" galvanized	30	G12FW	
50. Washer, lock 1/2" galvanized	15	G12LW	
51. Straight mount plate (90°)	2	99453-02	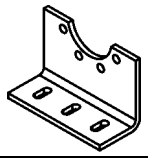
52. Screw, hex head 1/4-20 x 1-1/4" SS (radome flanges)	24	1/4-20SS020HM	
53. Nut, hex 1/4-20 SS	24	014-20SS	
54. Washer, flat 1/4" SS	48	014SSF	
55. Washer, lock 1/4" SS	24	014SSS	
56. Dow Corning 744 adhesive-sealant, tube	1 per antenna	DO 88060